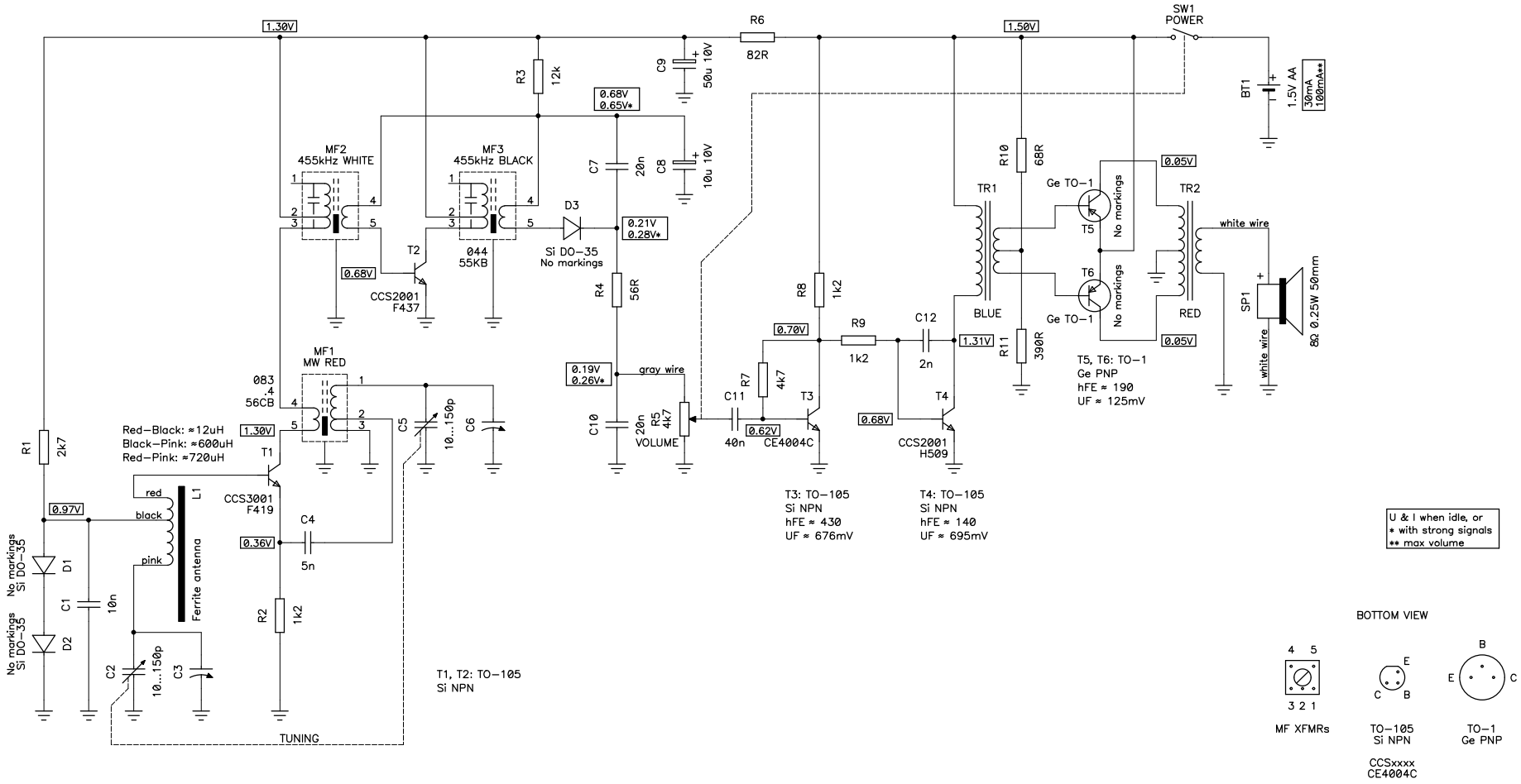


| | | |
|---|---|---|
| Title | "CORPORAL" 6-transistors vintage AM radio receiver | |
| Size A3 | Number About 1960 | Rev 1 |
| Date Sep. 26, 2021 | Drawn by HB9DUL | |
| Filename | Sheet of | |